International Journal of Business and Management Invention
ISSN (Online): 2319 – 8028, ISSN (Print): 2319 – 801X
www.ijbmi.org || Volume 5 Issue 5 || May. 2016 || PP—30-44

The Influence of Service Quality, and Customer Relationship Management (CRM) Of Patient Satisfaction, Brand Image, Trust, and Patient Loyalty on Indonesian National Army Level II Hospitals

Sutrisno[1], Prof. Dr. Hj. Ida Aju Brahmasari, Drg. Dipl., DHE., MPA.[1],
Dr. Hotman Panjaitan, M.T., M.M.[1].
[1]*(Doctorate Program, Universitas 17 Agustus 1945, Surabaya, Indonesia)*

ABSTRACT: *Indonesian National Army Hospitals (RS TNIs) is one of hospitals that servicing the Indonesian National Army (TNI) member, their family, civil servant and public community. In the competitive business situation like today, RS TNIs have to manage the change due to the new policy of health services in hospital. In 2014, the fundamental change of health services were occurred in correlation to National Health Insurance (JKN) for all of Indonesian people. This change concerned to financial management, funding, membership, treatment procedures, types of services, referral system, pattern rates, claim, supervision and evaluation. The number of regulatory changes in the newera of health care in Indonesia have triggered other changes, particularly hospital customer behavior. Population in this research were patient in 17 TNI level two hospitals all over Indonesia, who have been treated twice or more in TNI level two hospitals, at class 1, class 2 and class 3 rooms. Analyzing data using Generalized Least Square Estimation (GLS), Analysis Structural Equation (SEM) model, the proportional random sampling method and applying software Amos 22, on 246 respondents. The model testing (fit) of research data may viewed from GFI, AGFI, TLI, CFI, RMSEA and CMIN/DF values, which respectively were 0.922,0.914, 0.962, 0.973, 0.062 and 1.636 that all of those in the expected value range thus the model can be accepted. Results of this research indicated that: 1). Service quality is influencing patient satisfaction. 2). Service quality is influencing brand image. 3). Service quality is influencing trust. 4). Service quality is influencing patient loyalty. 5). Customer relationship management (CRM) is influencing patient satisfaction. 6). Customer relationship management (CRM) is influencing brand image. 7). Customer relationship management (CRM) is influencing trust. 8). Customer relationship management (CRM) is insignificantly influence patient loyalty. 9). Patient satisfaction is influencing patient loyalty. 10). Patient satisfaction is insignificantly influence brand image. 11). Brand image is influencing trust. 12). Brand image is influencing patient loyalty. 13). Trust is influencing on patient loyalty.*
Keywords : *Service quality, CRM, Patient satisfaction, Brand image, Trust, Patient loyalty.*

I. INTRODUCTION

Hospital of the Indonesian National Army (TNI RS) is one of the hospitals that serve a large family of Indonesian Armed Forces (TNI) and the general public. In a highly competitive situation and dynamic as today's era, RS TNI needs to look at the changes that occur due to changes in health care policy at the hospital. In 2014 there is a change in the fundamental health services in hospitals associated with the entry into force of the National Health Insurance (JKN) that guarantees health care for all Indonesian people. This change involves financial governance, financing, participation, treatment procedures, types of services covered and not covered, referral system, tariff scheme, claims, monitoring and evaluation. The amount of change in the new era of health care regulation in Indonesia trigger behavioral changes especially hospital patient treatment decisions. Sangadji and Sopiah (2013: 24) argues that "there are three main factors that drive the consumer to take decisions such as social, situational factors and psychological factors".

Social factors include laws/regulations, family, reference groups, social classes and cultures. Explanations of Law of the Republic of Indonesia Number 40 of 2004 on National Social Security System chapter 4 portability principle that social security is intended to provide continuous security of participants change jobs or residence in the territory of the Republic of Indonesia. It allows the military hospital patients, who are mostly large families outside the military health facilities owned by the TNI.

Situational factors include the state of the infrastructure and facilities where treatment of patients. National Social Security System (Navigation) which is managed by the Social Security Agency (BPJS) implement procedures and rules of health services in hospitals become new policy for military hospitals. Health care

procedures as stipulated in the Act BPJS article 29 paragraph (3) Participants must obtain health services in First Level Health Facilities (FKTP) registered participants. FKTP position with reference to the military hospital so far. TNI Hospital in Jakarta will have difficulty receiving a referral from Tangerang and Bekasi because of the distance is too far and the heavy traffic situation. Patients military hospital in this area will be considered to select the nearest referral hospital rather than selecting referred to a military hospital in Jakarta. Other areas are also experiencing the same thing even exist a single command, which has six such provincial Military Command Wirabuana VII, which is available only referral hospital in the capital of the Province/District.

Psychological factors include the perception, motivation, learning, attitude and personality. Attitudes and beliefs are psychological factors that influence the decision of the military hospital for treatment of patients. Attitude is a trend that was studied by the patient to certain situations and conditions consistently. Mowen and Minor (2002) in Sangadji and Sopiah (2013: 201) argues that consumer confidence is all the conclusions made by consumers about objects, attributes and benefits. Objects can be hospital services, people, the hospital itself and everything to which a person has beliefs and attitudes. Attributes are characteristics that are owned and not owned by the military hospital. Intrinsic attribute is everything related to the actual nature of hospital services. Extrinsic attributes are the gains of the external aspects of health services military hospital, as a symbol and brand name that became army hospital. The benefit is a positive result the quality of health services provided to patients.

Regulation of health services as set out in Article 32 paragraph (1) BPJS governing the service of medicine and medical material consumables mention the service of medicine and medical material consumables for insured people to health facilities based on the list and the price of drugs and medical materials consumables determined by the Minister. Patients were members of the military health services before the era of the military hospital facility services BPJS got drugs and medical consumables materials in full. After joining the RS military BPJS services must comply with the provisions in the Act BPJS so there is some medical consumable materials that can not be given. Limitations of drug services, medical devices and medical consumable materials will decrease the quality of health services. This issue also sparked distrust of patients to the hospital because the hospital TNI no longer benefit as it was before the era of National Health Insurance.

Schiffman and Kanuk (2010) defines "a decision as an act of two or more alternative options. A consumer who wanted to do a choice he should have alternative options". Patients who want treatment to the hospital, has a good selection of Hospital military and non-military hospitals. Associated with this brand selection Escalas (1996) in Sumarwan (2014: 88) put forward a concept called self meaningful brand connections, ie meaningful relationships that affect attitude toward the brand, behavioral tendencies, and behaviors of consumers. Consumers have a self-concept, but it also has a brand image perception or services to be used. Some products or services are often positioned as an exclusive product or brand that is different from other brands. It should be understood that there is a group of consumers who have a concept of yourself as someone who considers himself a very important and different from most others. It also occurs in health care in the military hospital. TNI members and their families is exclusive and it is important that the patient must take precedence ministry. They should get better service and can not be equated with non-military patients. While the health insurance provided by BPJS filled with limitations. Inpatient health care delivery advanced level Army members as stated in Article 60 BPJS Regulation No. 1 of 2014 on the Implementation of Health Insurance, just leave the treatment room to grade 1. In the era before applying JKN, a group of middle and high-ranking officers denied health services in the VIP room. Such conditions will cause dissatisfaction of patients, especially patients of the Armed Forces family. Besides the military hospital is not trusted anymore as their choice because it does not correspond to their self-concept.

Hospital TNI predicted would decrease the number of patients treated, the treatment days and the level of use of the bed by the constraints that exist. It looks at the data in one of the largest hospital level II TNI - AD in Cimahi, namely RS Dustira. Dustira Hospital is one of the largest hospitals in the military II level with a number of 505 beds, the hospital has been accredited plenary and accredited as a teaching hospital. This hospital is a hospital that has developed rapidly in the last three years. In 2011 the prevalence rate beds, BOR (Bed ocupancy Rate) per month in 2011 reached 64%, then increased to 73% in 2012 and increase in 2013 to 83%. The number of patients treated on average per month increased from 2011 to 2013, namely 1,768, 1,946 and 2,245. Similarly, day care shows an increasing trend where in 2011 the number of 9905, 2012 increased to 11 436 and increasing in 2013 to 12 380. In 2014 the number of Bed ocupancy Rate (BOR) where the previous highest figure is 83% now reduced to 46% in January, 52% in February, 48% in March and April only the highest figure reached 51%. (Sub-Directorate of Health Services of the army).

There are six hospitals has decreased since the shift BOR army hospital management of self-management into hospital BPJS partners beginning January 1, 2014. While nine other hospitals increased BOR as shown below.

Table 1: Average BOR RS TK II TNI year 2013 and 2014

No	HOSPITAL	BOR 2013 (%)	BOR 2014 (%)
1	RS Tk II Iskandar Muda Banda Aceh	35	38
2	RS Tk II Putri Hujau Medan	59,96	62,5
3	RS Tk II dr. AK. Gani Palembang	70	80
4	RS Tk II M. Ridwan Meuraksa Jakarta	52,45	45,11
5	RS Tk IIDustira Cimahi	61 %	54%
6	RS Tk II dr. Soedjono Magelang	64,21	59
7	RS Tk II dr. Soepraoen Malang	49,14	51,58
8	RS Tk II dr.R. Hardjanto Balikpapan	69,81	86
9	RS Tk IIPelamonia Makassar	56	62
10	RS Tk IIUdayana Denpasar	48	51,89
11	RS Tk IIPontianak	38,42	63
12	RS Tk II Prof. Dr. J.A. Latumeten Ambon	58,42	54,76
13	RS Tk II Marthen Indey Papua	64	69
14	RS Tk II dr. Suyoto Jakarta	61	57,83
15	RS Tk II dr. Mintohardjo Jakarta	49,53	42,53
16	RS Tk II dr. Esnawan Antariksa Jakarta	52,24	56
17	RS Tk II dr. Moch. Salamun, Bandung	58	77

Source: Sub Direktorat Kekuatan Kesehatan Direktorat Kekuatan Pertahanan, Kementerian Pertahanan (2014)

Data rate of hospital bed occupancy level II Army as listed in Table 1, it appears to fluctuate, depending on each hospital strategy implementing strategies that not many loyal customers who move to another hospital. One way transfer retain customers and bring in new customers is to increase customer loyalty. Having a loyal customer can help hospitals to address the threat of competitors as proposed by Aaker in Tatik Suryani (2013): "the strategic value of customer loyalty for companies include: reducing marketing costs, providing trade leverage for the company, attracting new customers, the company has time to respond to the threat ".

Some aspects such as service quality, brand image, satisfaction, Customer Relationship Management (CRM) and have a relationship of trust with the customer loyalty. As stated by Hasan A (2013: 126) "Brand image is closely related to Customer Loyalty, which if the consumer believes in the brand, they are difficult to switch to another brand". Experts other marketing associate satisfaction and quality with loyalty as proposed by Lovelock (2010) "The basis for the loyalty of true lies in customer satisfaction, where the quality of service being main input, the customers were very satisfied or even please the service tends to be a supporter of loyal company."

The influence of satisfaction on customer loyalty in a food business assessed by Rina Rachmawati, where in one conclusion to say that the satisfaction of having a role in the formation of loyalty and satisfaction is part of loyalty, but only one component of loyalty and not a key part of the nature of an engagement. In harmony with the above research is research conducted by Hesti Kartika Sari entitled Effectiveness Loyalty Program in Customer Relationship Management on Customer Satisfaction and Customer Loyalty concluded that satisfaction through Loyalty Program effect on loyalty, but can not be used as the sole reason for the customer to remain loyal, There may be other factors that can make a positive contribution to customer loyalty.

Improvement of service quality, customer satisfaction and strengthening the brand image of the hospital through relational ties would improve customer loyalty. Increased customer loyalty is believed to retain transfer of patients to other hospitals and increasing buying interest RS military health services. According to Buttle (2007: 48) "Customer Relationship Management or CRM is a core business strategy that integrates the processes and internal functions with all external networks to create and realize value for our customers profitably target. Supported CRM customer data quality and information technology". Effect of CRM on Customer Loyalty in PT BCA Tbk investigated by Kartika Imasari and Kezia K. Nursalin, concluded that customer loyalty is a journey without end. Increasingly competitive business competition, technological excellence and improved customer quality is a factor that is always pushing the dynamic changes in the services sector in Indonesia. Such a situation causes no guarantees that customer loyalty will last long time. Therefore CRM strategies and activities should be able to serve the needs of specific customers.

Relations of Brand Image and Brand Trust on the Brand Loyalty of bottled tea Sosro researched by Mohammad Rizan, S. Basra, Yusiyana Sari with multiple linear calculations showed that the variables of brand image and trust the brand to brand loyalty figures obtained 29.3%. This shows that the percentage contribution of the influence of independent variables, Brand and Brand Trust on the Brand Loyalty dependent variable is only

29.3%. Or in other words independent variables used in the model Brand Image and Brand Trust was able to explain 29.3% of dependent variable, Brand Loyalty. While the remaining 61.7% influenced or explained by other variables not included in this study model.

There is a theoretical and empirical gaps based on the results of research conducted by the researchers. Rina Rachmawati concluded that satisfaction is a part of loyalty but is not a key part of loyalty. In harmony with the research Hesti Kartika Sari also concluded that the effect of satisfaction on loyalty but can not be the sole reason because there are other factors that contribute. Linkages Loyalty and CRM investigated by Kartika Imasari that CRM effect on loyalty but does not guarantee the long-standing loyalty. While the relationship with Brand Loyalty and Trust investigated by M Rizan et al showed that Brand Image and Confidence effect only 29.3% while the remaining 61.7% is influenced by factors lain. In order to obtain a complete picture of customer loyalty, the author is interested in studying the influence quality of services, Customer Relationship Management (CRM) to client satisfaction, brand image, patient trust and loyalty of patients at the Hospital Level II Indonesian National Army. Originality of this study lies in the design of studies linking the Quality of Service and CRM Loyalty to the mediator variable Patient Satisfaction, Brand Image and Trust. And also look for relationships between CRM with the Trust.

II. LITERATURE REVIEW

1.1. Service Quality

Quality of service is the degree of compliance with professional standards in patient care and achieving the outcomes that are expected to both professionals and patients regarding the service, diagnostics, therapies, procedures or clinical problem-solving action.

2.2. Customer Relationship Management (CRM)

CRM is an integrated business strategy that integrates internal factors and external factors by means of analysis of customer data using information technology, in order to gain the attention of customers to achieve lifetime value so that companies and customers gain advantages and benefits. Patient satisfaction is a response to a feeling of satisfaction that arises because the experience of consuming a product or service, or a fraction of that experience.

2.3. Patient’s Satisfaction

Patient satisfaction is a response to a feeling of satisfaction that arises because the experience of consuming a product or service, or a fraction of that experience.

2.4. Brand Image

Brand image is the consumer perception of the brand as a reflection of the brand association in the form of intangibles attributes such as logos, symbols, and attributes intangible such as ideas, beliefs, values, interests and features, as well as the favourability, brand strength and unique brand that enable customers to evaluate, contributing and making a buying decision.

2.5. Consumer’s Trust

Consumer confidence is the consumer's knowledge of an object, attributes and benefits where the object can be a product, person, company, or anything to which a person has beliefs and attitudes.

2.6. Patient’s Loyalty

Patient loyalty is a psychological condition (attitudinal and behavioral) are strongly associated with attitudes toward the attributes of a product or service is different so that consumers form beliefs and decided to make repeat purchases, purchasing between product lines and services, recommend to others and show resistance to pull competition.

2.7. Effect of Service Quality on Consumer Satisfactin

Effect of Service Quality on Customer Satisfaction Patient In Hospital Inpatient Lounge Syech Joseph Gowa investigated by Suaib, Indar and Jafar Nurhaedar (2007). The results showed that the quality of service physicians effect on patient satisfaction and patient's general insurance / health card. Quality means of supporting effect on the patient and the patient's general insurance / health card. The variables that most influence on patient satisfaction is the service of nurses to patients.

Jacobis examining the factors of service quality influence on patient satisfaction Inpatient JAMKESMAS participants in BLU Hospital Prof. DR. R.D Kandou Manado. There are five dimensions of service quality.

Dimensions that influence the reliability, responsiveness, and empathy, while guarantees and physical facilities had no effect on patient satisfaction. Suarniki (2000) examined the effect on the quality of service satisfaction in the study titled Analysis of Quality of Service in Consumer Satisfaction Affects Maternity Hospital in the municipality of Banjarmasin. The results showed that the quality of service presented Maternity Hospital in Banjarmasin Municipality pretty well perceived by consumers and found that there is significant influence and trade-offs between quality of service and patient's satisfaction. Where the presence of satisfaction will result in rising image.

Elisa, Divianto, Manuel Hutagaol (2014). Examining the Influence of Service Quality Satisfaction Patient Medical Check Up (MCU) at the Hospital Dr. AK. Gani Palembang. Journal of Speech Business Edition XI, in May 2014. ISSN: 2085-1375. The results showed that proved simultaneously influenced by the quality of service that includes five variables, also concluded that the quality of service that most influence on patient satisfaction medical check up at the hospital Dr. AK. Gani Palembang is variable reliability.

Health Care Quality Impact on Customer Satisfaction in private hospitals and general hospitals in Jordan studied by Ahmad Mahmoud Yousef Ahmad Zamil and Areiqat proven that there is the influence of the quality of health care services to client satisfaction. Research from Anggia Felix (2012) presented at the National Seminar of Technology Management, MMT-ITS, Surabaya July 14, 2012, on the Influence of Total Quality Service and Customer Relationship Management Of Customer Satisfaction and Loyalty. By using SEM analysis, the results showed that customer relationship management affects the quality of service. Customer relationship management (CRM) effect on customer satisfaction. Service quality effect on customer satisfaction and customer satisfaction effect on customer loyalty.

2.8. Effect of Service Quality and Brand Image

Effect of Quality of Service on Brand Image examined by Marzany, Hadiwidjojo and Chandra titled Analysis of Patient Satisfaction as a mediating influence on the image quality of health services General Hospital (Hospital) Arifin Ahmad Pekan Baru. These results indicate that the quality of health care has a significant effect on patient satisfaction and the image of the hospital.

The quality of the relationship with the brand image studied by Lubis. The results of the simultaneous significance test (F-test) state simultaneously quality of service consisting of variable dimensions of physical evidence, reliability, responsiveness, assurance and empathy simultaneously is a significant effect on brand image polyclinic Haji Hospital Medan. Based on the partial test (t-test) showed that in partial guarantees, reliability, physical evidence and empathy are positively and significantly to the clinic Haji Hospital Medan. Research of Ferdy Aulia, Mohammad Hamsal 2010, Analysis Services and Image Quality Impact Patient Satisfaction And Loyalty Impact on Patients In Pertamina Hospital. The results showed that the quality of service affect the image of the hospital. Hospital image effect on patient satisfaction.

The quality of the relationship with the brand image was also examined by Hotman Panjaitan (2013), entitled The Effects of Service Quality Towards Consumer Responses through The Image of Private University in East Java. The study, published in the International Journal of Evaluation and Research in Education (IJERE), Vol 2, No. 2: June 2013, ISSN: 2252-8822. Shows that the quality of service, and image affects customer satisfaction. Influence the quality of service to the Brand Image in the hotel industry examined by Muhammad Ehsan Malik titled Impact of Service Quality on Brand Image: Empirical Evidence from the Hotel Industry. The results showed that the dimension of empathy, responsiveness and reliability are the instruments that can lift the image of the hotel. While the dimensions of the guarantee (Assurance) and tangibles (Tangible) has no effect at all raise the image of the hotel. Influence of Brand Image hospitals on the Quality of Service, Satisfaction and Loyalty patients studied by Wu Chao-Chan with the title The impact of hospital brand image on service quality, patient satisfaction and loyalty. Research results presented that brand image of the hospital either directly and indirectly on patient loyalty.

2.9. Effect of Service Quality on Trust

Relationship quality of service with the Trust studied by M Gunawan Alif and Yuliana Duti Harahap. The results showed that nurses Interpersonal Communication was not proven influence Trust. This occurs because patients have greater expectations of the doctors. Health facilities help improve the confidence of patients on quality of health services provided by the hospital. Trust has also proven to generate loyalty and subsequently generate positive word of mouth. Research Okky Erviana (2013) on the Influence of Service Quality and Patient Satisfaction Trust. Result: Confidence positive and significant impact on Inpatient Satisfaction in Hospital Dr. Soewondo Kendal. Quality of service is its effect on confidence investigated by Walandouw, Mekel and Sugito

results showed that simultaneous and partial service quality and brand image in a positive and significant impact on customer confidence Taplus card users BNI Branch of Manado.

2.10. Effect of Service Quality on Consumer Loyalty

Andri examines the influence of the performance of services to loyalty with the title Influence Performance Service and Patient Satisfaction As a Moderator Variable to the loyalty of patients on Islam Ibn Sina Hospital. The results of this study are the interaction between service performance and customer satisfaction contributes to customer loyalty. Patient satisfaction, trust and commitment as a mediator Quality of Service influence on loyalty investigated by Patawayati, Djumilah Zain, Tanuwijaya Setiawan and Mintarti Rahayu titled Patient Satisfaction, Trust and Commitment: Mediator of Service Quality and Its Impact on Loyalty (An Empirical Study in Southeast Sulawesi public Hospitals).

The results showed that the Quality of Service, through patient satisfaction, patient trust, and commitment to positive and significant impact on patient loyalty. Furthermore, patients Trust and Commitment positive and significant impact caused by patient satisfaction. The study also proved that increasing patient satisfaction can also increase the customer loyalty through mediator variable patient confidence and commitment. However, patient satisfaction excluding mediator variables of service quality to customer loyalty. Research on the effect of quality of service towards Loyalty with Customer Relationship Management as mediator variables studied by Ida Ayu Werdiningsih Kesuma, Djumilah Hadiwidjojo, Ni Luh Putu Wiagustini and Fatchur Rohman. Studies shown that quality of service is a positive and significant effect on loyalty. CRM implementation services as a mediator to affect the quality of customer loyalty.

2.11. Effect of Service Quality on Consumer Loyalty

Research Feliks Anggia and Hotman Panjaitan (2014), published in the International Journal of Evaluation and Research in Education (IJERE), Vol.3, No.3, September 2014, pp. 142 ~ 151, on the Analysis of Customer Loyalty through Total Quality Service, Customer Relationship Management and Customer Satisfaction by using SEM analysis, the results showed that: Customer relationship management and significant positive effect on customer satisfaction; Customer relationship management and significant positive effect on loyalty; Customer satisfaction and significant positive effect on loyalty, it indicates that the establishment of customer satisfaction will encourage increased customer loyalty.

Loyalty program effectivity in Customer Relationship Management on Customer Satisfaction and Loyalty (Studies Division Event Retention in Loyalty Program Implementation "IM3 @ School Community" in PT Indosat Tbk. Branch Malang) were studied by Hesti Kartika Sari. From the analysis and discussion of data found no significant relationship between Customer Relationship Management (CRM) through the Loyalty Program to the satisfaction and loyalty of customers. The results of the study generally concludes that in order to generate loyal customers is by providing high value Loyalty Program and loyalty key itself is satisfaction.

Analysis of Application of Customer Relationship Management (CRM) in the Library STMIK Pringsewu In to Increase Student Satisfaction Susilowati and researched by Tri Agus Suryana. Results of research conducted by t-test and F-test showed that there is real influence of independent variables (Facility Services, Service, Administration and Application TI) on the level of student satisfaction STIMIK Pringsewu.

2.12. Effect of Brand Image on Trust

Influence of Brand Image Of Faith investigated by Nadia Kusuma Ward et al on 108 students with data analysis multiple regression where variable brand consists of product attributes and brand personality shows the result in the variable brand personality majority of consumers agree that the brand personality Primagama Branch Tulungagung as Primagama consistent in maintaining the quality. Consumer confidence in the variable Primagama Branch Tulung agreed which means that consumers trust the competency of Primagama Tulungagung. Simultaneously there is a positive and significant influence between the variables that comprise the brand image of product attributes and personality of the product to consumer confidence in the Organization Tutoring Primagama Tulungagung.

2.13. Effect of Trust on Customer Loyalty

Effect of Quality, Trust and Customer Satisfaction Muzahid researched by Mohammad Akbar and Noorjahan Parvez titled Can Service Quality, Trust, And Customer Satisfaction Engender Customer Loyalty? By using Confirmatory Factor Analysis and Structural Equation Modeling (SEM) analyzes customer 304 private telecommunication company in Bangladesh showed that trust and customer satisfaction significant and positive

impact on customer loyalty. The results of this study reinforce previous research that trust and customer satisfaction have an effect on customer loyalty.

Influence of Brand Trust on the Brand Loyalty in the Consumer Water Aqua in Denpasar investigated by Riana Gede by testing the effect of brand characteristic, company characteristics, and consumer-brand characteristics on brand loyalty in drinking water Aqua. The results of this study is jointly variable trust in a brand that includes the brand characteristics (x1), company characteristics (x2), and consumer-brand characteristics affect brand loyalty. Then in partial trust in a brand that includes the brand characteristics (x1), company characteristics (x2), and consumer-brand characteristics significantly influence brand loyalty.

Quality of service, confidence and loyalty investigated by Ratna Roostika entitled The Effect of Perceived Service Quality and Trust on Loyalty: Customer's Perspective on Mobile Internet Adoption. The conclusion is contextual quality, interaction quality and privacy are top contributors to quality service quality. The study also concluded that service quality and trust positively affects customer loyalty.

III. RESEARCH METHODS

3.1. Research Subjects

The population in this study were inpatients per day in 17 (seventeen) hospital level II TNI throughout Indonesia, namely 1 (one) hospital level II Ministry of Defence, 13 hospital level II Army, two (2) hospital level II Air Force and one (1) RS level II Navy. The population in this study were hospital patients who had been treated twice or more in a two-level military hospital, in the treatment room class 1, class 2 and class 3. The number of samples that must be met when using the analysis of Structural Equation Model (SEM), with an analysis of Generalized Least Square Estimation (GLS), with a sample of 246 respondents, by sampling as follows: Hospital Level II TNI there are two groups of hospitals with the number of beds under 200 and the number of hospitals with 200 beds or more. Hospitals with the number of beds to 200 or more is a hospital that meets the standards as a hospital grade B. Whereas the number of hospitals with under 200 beds mostly hospital grade III or grade level C elevated the status of a level II hospital or class B. Hospitals that meet the standards of the Ministry of Health as the hospital level II or level of class B quota by 18 respondents. Hospital under the hospital standard Level II or class B Ministry of Health, given quotas 12 respondents. Furthermore, each subdivided into each quota equal treatment class is class 1, class 2 and class 3. For hospitals that receive quota 18 respondents, samples will be taken from kelas1, class 2 and class 3 equally, each 6 respondents, While the hospital gets a quota of 12 respondents were divided each class of treatment in 4 respondents.

3.2. Research Hypotheses

The hypothesis of this study are as follows:

1. Quality of service is a significant effect on the level II Hospital Patient Satisfaction Indonesian National Army
2. Quality of service is a significant effect on the level RS Brand Image II Indonesian National Army
3. Quality of service is a significant effect on the level II Hospital Patient Confidence Indonesian National Army
4. Quality of service is a significant effect on the level II Hospital Patient Loyalty Indonesian National Army.
5. Customer relationship management (CRM) significantly affects the level II Hospital Patient Satisfaction Indonesian National Army.
6. CRM significantly influence to the RS brand image II level Indonesian National Army.
7. CRM significantly influence on Patient Trust (Trust) RS level II Indonesian National Army.
8. CRM significantly influence on the level II Hospital Patient Loyalty Indonesian National Army.
9. Patient satisfaction significantly influence the level II Hospital Patient Loyalty Indonesian National Army
10. Patient satisfaction significantly influence the level RS Brand Image II Indonesian National Army.
11. Brand image significantly influence the level II Hospital Patient Loyalty Indonesian National Army.
12. Brand image significantly to confidence level II Hospital Patients Indonesian National Army.
13. Patients trust significantly influence the level II Hospital Patient Loyalty Indonesian National Army.

3.3. Research Measurements

Variable quality of these services operationally measured using eight (8) indicators adopted from Lori Di Prete Brown in Wijono (1999), namely: Technical Competence, Access, Effectiveness, Interpersonal Man, efficiency, continuity of service, security, and comfort. Variable Customer Relationship Management (CRM) is operationally measured using three (3) indicators adopted from Sheth, Parvatiyar and Shainesh (2001), namely: Continuity Marketing, One to One Marketing, Partnering Program.

Variable Patient satisfaction is operationally measured using five (5) indicators adopted from Hasan (2013), namely: Serviceability, Courtesy, Reliability, Tangible and Understanding The Customer. Variable Brand image is operationally measured using four (4) indicators developed by Aaker, (1991), namely: Trademark Association, favorability, Brand Strength and Brand uniqueness. Variable Consumer Confidence (Trust) is operationally measured using four (4) indicators developed by Blanchard, Olmstead and Lawrence (2013), namely: Able, Believable, Connected, Dependable. Variable brand image operationally measured using four (three) indicators developed by Griffin (2005), namely: Purchases Birthday, recommendation to others, buy a variety of product lines, and Immunity against competitors.

From the results of the Pearson product moment correlation, it is known that all the questions on the questionnaire items have significant correlation on an error rate of 5% (sig <0.05), so we can say all of the item in question is valid. Reliability test results with test Cronbach alpha (α) in this study indicate that all variables of the study are reliable, since the entire value of the alpha coefficient of each study variable is greater than the standardized (0.6), and the value corrected item total correlation of the entire item in question is greater than 0.3, so that each item on the question of measurement instruments can be used.

IV. RESULTS AND DISCUSSIONS

4.1. Results Analysis

There is the influence of the quality of service to client satisfaction at 0.377, with CR = 3.532, and the significance 0,000. A good service that has been given to the army hospital patients, will increase patient satisfaction means that the hypothesis 1 is accepted. There is a service quality influence on brand image at 0,137, with CR = 2.079 and 0.038 significance. Good quality of service given to the army hospital patients, will enhance the brand image berararti second hypothesis is accepted. There is the influence of the quality of service of the trust (trust) amounted to 0.164 patients with CR = 2.492 and 0.013 significance. Good quality of service given to the army hospital patients, will increase the confidence of patients, meaning third hypothesis is accepted.

There is the influence of the quality of service for patient loyalty of 0.227, with CR = 6.346 and 0.000 significance. Quality of service is a significant effect on patient loyalty, means the accepted hypothesis 4. There is the influence of variables CRM to client satisfaction at 0.078, with CR = 2.088 and 0.037 significance. CRM significant effect on patient satisfaction, means that the hypothesis is accepted 5. There is the influence of CRM to the brand image of .882, with SCR = 6.008 and 0.000 significance. CRM significant effect on brand image, it means 6 hypothesis is accepted.

There is the influence of CRM to the patient confidence of 0.107, with CR = 6.008 and 0.000 significance. CRM significant effect on patient trust, means accepted hypothesis 7. There is the influence of variables Loyalty CRM to patients at 0,048, with a value of CR = 0499, and the significance of 0.618. CRM not significant effect on patient loyalty. 8 This means that the hypothesis is rejected. There is the influence of patient satisfaction with loyalty pasiensebesar 0.134, with CR = 3.128 and 0.000 significance. Patient satisfaction significantly influence the loyalty pasien means 9 hypothesis is accepted. There is the influence of patient satisfaction to the brand image of 0.029, with CR = 0.689 and 0.491 significance. Patient satisfaction is not significant effect on brand image, meaning hypothesis 10 was rejected. There is the influence of the variable brand image to patient loyalty sebesar 0.189, with a value of CR = 2,242, and the significance of 0.025. Brand image significantly influence patient loyalty means 11 accepted hypothesis.

There is the influence of the brand image of the patient confidence of 0.107, with CR = 2.075 and 0.042 significance. Significant effect on the brand image of patient confidence means hypothesis 12 is accepted. There influence from influence patients trust of the Loyalty patients at 0.109, with CR = 2.539 and 0.011 significance. Significant effect on the patient's belief Loyalty patients, meaning that hypothesis 13 is accepted.

4.2. Model Test Result

The structure of the model used to describe models of causality research with tiered relationship. Model baseline (Proposed Model) has been created, analyzed by structural equation modeling (structural equation model) with the help of software AMOS 22. Assessment of the goodness of fit, the probability is equal to zero (chi-square value is large) so that the null hypothesis can not be rejected, or accept the null hypothesis that states the sample covariance and covariance population is not the same. This indicates that the accepted research model just has not entered criteria (standard) were determined.

Tabel 2. Goodness of Fit Index Structural Proposed Model

No	Goodness of Fit Index	Cut-off Value	Model Test Result	Information
1	χ2 / Chi-Square		2881,441	Small
2	*Significance probability*	≥ 0,05	0,000	Less
3	GFI	≥ 0,90	0,547	Less
4	AGFI	≥ 0,90	0,456	Less
5	TLI	≥ 0,95	0,409	Less
6	CFI	≥ 0,94	0,472	Less
7	RMSEA	≤ 0,08	0,175	Less
8	Relative χ2 (CMIN/DF)	≤ 2,00	8,525	Less

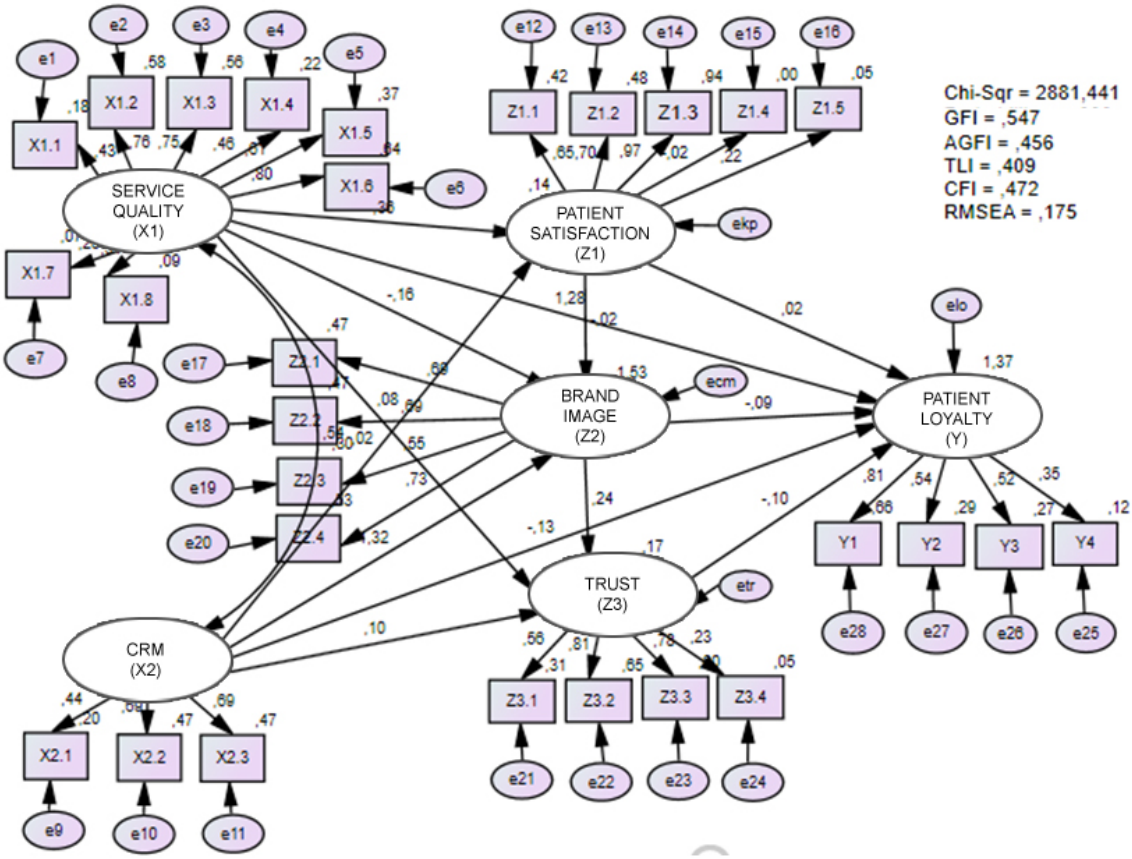

4.3. Hypothesis Test Result

Hypothesis 1

The quality of service significantly influence patient satisfaction level II hospital Indonesian National Army. That there is an influence on the quality of service to client satisfaction at 0.377, with CR = 3.532 and 0.000 significance. Good quality care that has been given to the army hospital patients, will increase patient satisfaction means that the hypothesis 1 is accepted.

Hypothesis 2

Quality of service is a significant effect on the level of the RS brand image II Indonesian National Army. That there is an influence on the quality of service to the brand image at 0,137, with CR = 2.079 and 0.038 significance. Good quality of service given to the army hospital patients, will enhance the brand image berararti second hypothesis is accepted.

Hypothesis 3

Quality of service is a significant effect on the level II hospital patient trust the Indonesian National Army. That there is an influence on the quality of service of the trust (trust) amounted to 0.164 patients with CR = 2.492 and

0.013 significance. Good quality of service given to the army hospital patients, will increase the confidence of patients, meaning third hypothesis is accepted.

Hypothesis 4
Service quality significantly influence the customer loyalty level II RS Indonesian National Army. There is an influence on the quality of service for patient loyalty of 0.227, with CR = 6.346 and 0.000 significance. Quality of service is a significant effect on patient loyalty, means the accepted hypothesis 4.

Hypothesis 5
Customer relationship management (CRM) significantly affects patient satisfaction level II hospital Indonesian National Army. There is the influence of variables CRM to client satisfaction at 0.078, with CR = 2.088 and 0.037 significance. CRM significant effect on patient satisfaction, means that the hypothesis is accepted 5.

Hypothesis 6
CRM significant effect on brand image RS II level Indonesian National Army. There is the influence of CRM to the brand image of .882, with CR = 6.008 and 0.000 significance. CRM significant effect on brand image, it means 6 hypothesis is accepted.

Hypothesis 7
CRM significant effect on patient trust (Trust) RS level II Indonesian National Army. There is the influence of CRM to the patient confidence of 0.107, with CR = 6.008 and 0.000 significance. CRM significant effect on patient trust, means accepted hypothesis 7.

Hypothesis 8
CRM significant effect on the level II hospital patient loyalty Indonesian National Army. There is the influence of the variables of patient loyalty CRM to 0,048, with a value of CR = 0499, and the significance of 0.618. CRM not significant effect on patient loyalty. 8 This means that the hypothesis is rejected.

Hypothesis 9
Patient satisfaction significantly influence the level II Hospital Patient Loyalty Indonesian Army RS II level Indonesian National Army. There is the influence of patient satisfaction with patient loyalty of 0.134, with CR = 3.128 and 0.000 significance. Patient satisfaction significantly influence patient loyalty means that the hypothesis 9 is received.

Hypothesis 10
Patient satisfaction significantly influence brand image RS level II Indonesian Army RS II level Indonesian National Army. There is the influence of patient satisfaction to the brand image of 0.029, with CR = 0.689 and 0.491 significance. Patient satisfaction is not significant effect on brand image, meaning hypothesis 10 was rejected.

Hypothesis 11
Brand image significantly influence the level II hospital patient loyalty Indonesian National Army. There is the influence of the brand image variable patient loyalty of 0.189, with a value of CR = 2,242, and the significance of 0.025. Brand image significantly influence patient loyalty means 11 accepted hypothesis.

Hypothesis 12
Brand image significantly influence patient trust level II hospital Indonesian National Army. There is an influence on the brand image of the patient confidence of 0.107, with CR = 2.075 and 0.042 significance. Brand image significantly influence patients' trust means 12 accepted hypothesis.

Hypothesis 13
Significant effect on the patient's belief loyalty level II hospital patients Indonesian National Army. There is the influence of patient trust (trust) of the Loyalty patients at .109, with CR = 2.539 and 0.011 significance. Significant effect on the patient's belief Loyalty patients, meaning that 13 hypothesis is accepted.

V. CONCLUSION

From the test results of the model in this study, was able to explain the relationship between service quality and Customer Relationship Management (CRM) on patient satisfaction, brand image, Trust and Loyalty hospital patients. Based on the analysis and hypothesis testing research that has been done before then from this study can be concluded as follows:

1. Quality of service can significantly affect patient satisfaction level II military hospital. The results are consistent with the findings of Bloemer, Ruyter and Peter (1998), in his research found that the quality of services either directly will have an influence on satisfaction. The results of this study strengthen the results of research conducted by Rachmat Hidayat (2009), Suaib, Indar, Jafar N (2007), Okky Erviana (2013), Panjaitan (2013), Cronin et al., (2000), which shows the influence of the significant variables of service quality to customer satisfaction. The dominant factor shaping the quality of service is access to services, service continuity and effectiveness of services. The results support the theory Gasperz Vincent and Tjiptono that the quality is the totality of the character of services that meet specific needs. The specific needs of hospital patients are two TNI levels include the ease and convenience in obtaining services.
2. Quality of care significantly influence brand image level II military hospital. The results of this study strengthen the results of research conducted olehMarzaweny, Hadiwidjojo and Chandra (2004), Ferdy Aulia, Mohammad Hamsal (2010), Suarniki (2000), Lopez (2011), Muhammad Ehsan Malik (2011), showed a significant effect of variables Quality services to brand image.
3. The quality of service significantly influence the Trust (the Trust) level II hospital patients TNI. The results are consistent with research Walandouw, Mekel and Soegoto (2014), M Gunawan Alif and Yuliana Duti Harahap (2014).
4. Quality of service is a significant effect on patient loyalty level II military hospital. The results of this study strengthen the results of research conducted by Andri (2012) and Felix (2013), Ida Ayu Werdiningsih, which showed a significant effect on the service quality variable customer loyalty. The results support the theory Kotler and Armstrong and Winardi that the quality factor, brand image and satisfaction plays an important role and will determine the customer as their prospective customers into loyal customers or not at a later date.
5. Customer Relationship Management (CRM) significantly affects patient satisfaction level II military hospital. The results of this study strengthen the results of research conducted by Dasha and Pandab (2011), Hesti Kartika Sari (2009), Imasari and Nursalin (2009), Felix (2014), Tri Susilowati and Agus Suryana (2012), which showed a significant effect of variables customer Relationship Management (CRM) with variable customer satisfaction. Indicators dominant in this research is the One to One Marketing and Continuity Marketing.
6. Customer Relationship Management (CRM) significantly affects brand image level II military hospital. The results also reinforce the results of research conducted by Gbadeyan (2006), Felix (2012), which showed a significant effect of variables CRM with the brand image.
7. Customer Relationship Management (CRM) significantly affects patients' trust level II military hospital. The results also reinforce the results of research conducted by Dasha and Pandab (2011), M Gunawan Alif and Yuliana Duti Harahap (2013), Hesti Kartika Sari (2009), which showed a significant effect of variables CRM with confidence.
8. Customer Relationship Management (CRM) not significant effect on patient loyalty level II hospital TNI. The result of this study aline with the results of research conducted by M Gunawan Alif and Yuliana Duti Harahap (2013), which showed no significant effect of variables CRM with customer loyalty. The results of this study are not in line with the findings of Hesti Kartika Sari (2009). CRM research results can not produce loyal patients because hospitals are not able to provide high value Loyalty Program.
9. Patient satisfaction significantly affect patient loyalty level II military hospital. The dominant indicator of patient satisfaction is courtesy, understanding the customer and reliability. The results of this study strengthen the results of research conducted Alida Palilati (2007), Rina Rachmawati (2010), M Gunawan Alif and Yuliana Duti Harahap (2013), Mirah Ayu Putri Trarintya (2011), which showed a significant effect of customer satisfaction on customer loyalty. The results of this study also supports the theory Kotler and Armstrong and Winardi that factor quality, brand image and satisfaction is really important and will determine the customer as their prospective customers into loyal customers or not at a later date.
10. Patient satisfaction not significant effect on brand image level II military hospital. The results of this study are not in line with the results of research conducted by Nha Nguyen and Gaston Le Blance (1998), and Lasander (2013), Marzaweny, Hadiwidjojo and Chandra, Ferdy Aulia, Mohammad Hamsal (2010), Lasander (2013), Muhammad Ehsan Malik (2011).

11. Brand image significantly influence patient loyalty level II military hospital. The results of this study strengthen the results of research conducted by Hartono Saputra Subagio and Robin (2012), Rizan Mohammed, Saidani Basra and Sari Yusiana (2012), which showed a significant influence on the brand image of the customer loyalty. The results support the theory Kotler and Armstrong and Winardi that the brand image factors play an important role and will determine the customer as their prospective customers into loyal customers or not at a later date.
12. Significant effect on the brand image of the Trust level II hospital patients TNI. The results also reinforce the research that conducted by Nadia Kusuma Ward et al (2012), M Gunawan Alif and Yuliana Duti Harahap (2013), which showed a significant effect of brand image to customers trust.
13. Significant effect on the patient's belief loyalty level II hospital patients TNI. The results of this study strengthen the results of research and Noorjahan Akbar Mohammed Parvez Muzahid (2009), Riana Gede (2008), Ratna Roostika (2011), Rully Tjahyadi Arlan (2006), which showed a significant effect Confidence variable to variable customer loyalty.

VI. FURTHER RESEARCH DIRECTIONS

The findings obtained in this study can be input and consideration to develop the following research so that the development of science, especially the science of consumer behavior hospitals and hospital service marketing strategy in accordance with the time and era. Suggested to other researchers to further examine the factors that affect CRM, brand image, especially hospitals and hospital patient loyalty. Given the many factors influencing the CRM, brand image and loyalty hospital patients, which can be developed with other indicators that have not been found in this study.

REFERENCES

[1] Agung Kresnamurti R.P., Ariani Putri, 2012. Pengaruh Kualitas Produk dan Citra Merek Terhadap Loyalitas Konsumen Pada Produk Oli Federal di Wilayah Jakarta Timur (Studi Kasus Pada bengkel resmi AHASS 2647 Dewi Sartika). Universitas Indonesia. Jurnal Econo Sains, Vol. X, No. 1, Maret 2012

[2] Ahmad Mahmoud Zamil dan Ahmad Yousef Areiqat, 2012.Pengaruh Kualitas Layanan Kesehatan pada Kepuasan Pelanggan di rumah sakit swasta dan rumah sakit umum di Jordan, Journal of Scientific Research 12 (6): 862-869

[3] Alida Palilati, 2007. Pengaruh Nilai Pelanggan, Kepuasan Terhadap Loyalitas Nasabah Tabungan Perbankan Di Sulawesi Selatan, Jurnal Manajemen Dan Kewirausahaan, Vol. 9, No. 1, Maret 2007, ISSN: 1411-1438

[4] Alisjahbana, Juita, Zarnodji, Sulistyaningsih, 2004. Hubungan Pengaruh Kualitas Jasa Layanan (Servqual) terhadap Kepuasan Pasien Rawat Inap RSU Wijaya Surabaya, Humanika, Vol. 8, No. 1, hal 53-61.

[5] Alma, Buchari, 2013. Manajemen Pemasaran dan Pemasaran Jasa, Edisi Revisi Alfabeta, Bandung.

[6] Amelia Tri Utami, Hadi Ismanto, dan Yuni Lestari, 2013. Pengaruh Kualitas Pelayanan Terhadap Kepuasan Pasien Rawat Jalan di Unit Gawat Darurat Rumah Sakit Bhayangkara Pusat Pendidikan Brigade Mobil Watukosek. Program Studi Ilmu Administrasi Negara Fisip Universitas Muhammadiyah, Jurnal JKMP, Vol. 1, No. 1, Maret 2013, 1-112

[7] Andreani F, dan Taniaji T.L., 2012. Puspitasari, The impact of Brand Image, Customer Loyalty with Customer Satisfaction as A Mediator in Mcdonald's. Jurnal Manajemen dan Kewirausahaan, Vol.14, No 1, Maret 2012 :63-70.

[8] Andri, 2004. Pengaruh kinerja layanan terhadap loyalitas dengan judul Pengaruh Kinerja Layanan dan Kepuasan Pasien Sebagai Variabel Moderator terhadap loyalitas pasien pada RS Islam Ibnu Sina. Humanika, Vol. 8, No. 1, hal 62-78.

[9] Bella Gusniar, 2014. Pengaruh Citra Merek (Brand Image), Harga dan Kualitas Produk Terhadap Keputusan Pembelian Produk Hand and Body Lotion Merek CitraDokumen Karya Ilmiah, Fakultas Ekonomi & Bisnis Universitas Dian Nuswantoro, 2014

[10] Blanchard Ken, Olmstead Cynthia and Lawrence Martha, 2013.Trust Works. Empat Kunci Untuk Membangun Hubungan Yang Abadi. PT Alex Media Komputindo. Jakarta

[11] Bloemer, Ruyter and Peter, 1998. Investigating Driver of Bank Loyalty: The Complex Relationship between Image, Sevice Quality and Satsfaction, Journal of Marketing. Vol. 9. No.3, pp. 23-42.

[12] Buttle, Francis, 2007. Customer Relationship Management: Concepts and Technology. Oxford: Butterworth-Heinemann, imprint of Elsevier.

[13] ChaoWu Chan, 2011.The impact of hospital brand image on service quality, patient satisfaction and loyalty, Journal Management 6 (1) (2011) 43-56

[14] Christian Lasander, 2013. Citra Merek, Kualitas Produk, Dan Promosi Pengaruhnya Terhadap Kepuasan Konsumen Pada Makanan Tradisional (Survey Pada Industri Rumah Tangga Dodol Daging Pala Audia di Tahuna Kab. Sangihe) Jurnal EMBA, Vol.1 No.3, September 2013, Hal. 284-293 ISSN: 2303-1174

[15] Dasha Saroj Kumar and Pandab Arun Kumar, 2011. Managing Customer Relationships In Private Health Care – a Study with Reference to Greater Noida City of Utar Pradesh Serbia, Journal Management 6 (1) (2011) 27-42.

[16] Dibyo Iskandar, 2010. Pengaruh Kualitas Pelayanan Terhadap Loyalitas Nasabah Dengan Kepuasan dan Kepercayaan Nasabah Sebagai Variabel Intervening (Studi Empiris Nasabah Pd. Bank Perkreditan Rakyat BKK Boyolali Kota). Lawang). Jurnal Bisnis Vol. 2, No. 2, Juli-Desember 2010 ISSN: 2085-0972

[17] Dwi Aryani, Febrina Rosinta, 2010. Pengaruh Kualitas Layanan terhadap Kepuasan Pelanggan dalam Membentuk Loyalitas PelangganBisnis & Birokrasi, Jurnal Ilmu Administrasi dan Organisasi, Vol. 17, No. 2, Mei-Agus 2010, hlm. 114-126ISSN: 0854-3844

[18] Ehsan Malik Muhammad, 2011.Impact of Service Quality on Brand Image: Empirical Evidence from Hotel Industry Interdisciplinary Journal of Contemporary Research in Business vol 3, no 8 Desember 2011.

[19] Elisabeth Desi AristaAnalisis, 2010. Pengaruh Iklan, Brand Trust dan Brand Image Terhadap Minat Beli Konsumen Telkom Speedy di Kota Semarang, http://eprints.undip.ac.id/29465/1/JURNAL.pdf

[20] Enggie Rucitra Mulyana, 2010. Pengaruh Kualitas Pelayanan Terhadap Kepuasan Dan Kepercayaan Pasien Rawat InapRumah Sakit Ganesha Gianyar, Universitas Udayana, Denpasar 2010.

[21] Elisa, Divianto, Manuel Hutagaol, 2014. Pengaruh Kualitas Layanan Terhadap Kepuasan Pasien Medical Check Up (MCU) Pada Rumah Sakit Dr. AK. Gani Palembang. Jurnal Orasi Bisnis Edisi ke-XI, Mei 2014. ISSN: 2085-1375

[22] Ernani Hadiyati. 2010. Analisis Kualitas Pelayanan Dan Pengaruhnya Terhadap Loyalitas Pelanggan (Studi Kasus Pada PT. Pos Indonesia (Persero) Kantor Pos Lawang).Jurnal BisnisVol. 2, No. 2, Juli-Desember 2010 ISSN: 2085-0972

[23] Estiningsih dan Hariyanti, 2014. Pengaruh Customer Relationship Management (CRM) terhadap Loyalitas Ibu Hamil pada layanan persalinan (Studi di RS Hermina Tangkubanprahu Malang). Jurnal Manajemen Bisnis, Mei 2014, ISSN: 2088-1376

[24] Evy Kartikasari, 2008. Pengaruh citra perusahaan, nilai yang dirasa dan kepuasan terhadap loyalitas nasabah pada industry perbankan di Surabaya,

[25] Ferdinand, Augusty, 2010. Structural Equation Modelling (SEM) Dalam Penelitian Manajemen, Fakultas Ekonomi Universitas Diponogoro, Semarang.

[26] Feliks Anggia B.K.P, Hotman Panjaitan, 2012. Analisis Kepuasan Melalui Manajemen Hubungan Pelanggan, Kualitas layanan dan Citra perusahaan, Prosiding Seminar Nasional Manajemen Teknologi, MMT-ITS, Surabaya 14 Juli 2012

[27] Feliks Anggia, 2013. Pengaruh Total Quality Service dan Customer Relationship Management Terhadap Customer Satisfaction dan Loyalty. www/docstoc/feliks23

[28] Feliks Anggia B.K.P, Hotman Panjaitan, 2014. Analysis of Customer Loyalty through Total Quality Service, Customer Relationship Management and Customer Satisfaction, International Journal of Evaluation and Research in Education (IJERE), Vol 3, No 3: September 2014, pp. 142-151: ISSN: 2252-8822. http://www/ijere/ feliks_anggia. www/scribd/feliks_anggia

[29] Ferdy Aulia, Mohammad Hamsal, Dr. Ir.MSe,MQM,MBA,2010, Analisis Pengaruh Kualitas Pelayanan Dan CitraTerhadap Kepuasan Pasien dan Dampaknya Terhadap Loyalitas Pasien Pada Rumah Sakit Pusat Pertamina. Jurnal Ekonomi dan Manajemen, Vol. 2, No.2, Juni 2011, Hal. 161-171.

[30] Gaby I. M. Walandouw, Peggy A. Mekel, Agus S. Soegoto, 2014. Kualitas Pelayanan Dan Citra Merek Pengaruhnya Terhadap Kepercayaan Nasabah Bertransaksi E-Banking Melalui Kartu Debit Taplus BNI. Jurnal EMBA 1261, Vol. 2, No.2, Juni 2014, Hal. 1261-1271. ISSN: 2303-1174

[31] Gaspersz Vincent, 2002. Konsep Vincent, Penerapan Konsep Vincent tentang Kualitas Dalam Manajemen Bisnis Total, PT Gramedia Pustaka Utama, Jakarta

[32] Gbadeyan, 2011.Customer Relationship Management and Hospital Service Quality in Nigeria.Journal Management 6(1) (2011) 57-69

[33] Griffin Jill, 2005.Customer Loyalty, Menumbuhkan dan Mempertahankan Kesetiaan Pelanggan, Erlangga, Jakarta

[34] Hardiansyah, 2011.Kualitas Pelayanan Publik. Konsep, Dimensi, Indikator dan Implementasinya. Gava Media, Yogyakarta.

[35] Hair, Joseph, Robert P. Bush & David J. Ortinau, 2006. Marketing Research. Within a Changing Information Environtment. McGraw-Hill Companies.

[36] Hasan A., 2013.Marketing dan Kasus-Kasus Pilihan, CAPS (Center for Academic Publishing Services), Yogyakarta

[37] Hesti Kartika Sari, 2009. Efektifitas Loyalty Program Dalam Customer Relationship Management Terhadap Kepuasan Dan Loyalitas Pelanggan (Studi Kegiatan Divisi Retensi Dalam Pelaksanaan Loyalty Program "Im3@School Community" Pada PT Indosat Tbk. Kantor Cabang Malang), Jurnal Ilmu Komunikasi, Vol. 6, No. 2, Desember 2009

[38] Hotman Panjaitan, 2013. The Effects of Service Quality Towards Consumer Responses through The Image of Private University in East Java, International Journal of Evaluation and Research in Education (IJERE), Vol 2, No 2: June 2013, pp. 14-22: ISSN: 2252-8822. http://www/ijere/hotmannp

[39] Imasari Kartika, Muzahid Akbar M. dan Parvez Noorjahan, 2009.Service Quality, Trust, And Customer Satisfaction Engender Customer Loyalty. ABAC Journal Vol.29, No 1 January-April 2009,pp.24-38

[40] Ida Ayu Werdiningsih Kesuma, Djumilah Hadiwidjojo, Ni Luh Putu Wiagustini & Fatchur Rohman, 2010. Service Quality Influence on Patient Loyalty: Customer Relationship Management as Mediation Variable (Study on Private Hospital Industry in Denpasar). Humanika, Vol. 8, No. 1, hal 87-99.

[41] Indah Setyawati, 2009. Analisis Pengaruh Kualitas Layanan dan Kepuasan Pasien Terhadap Words Of Mouth Studi Pada Pasien Rawat Jalan RS. Bhakti Wira Tamtama Semarang, Program Pasca Sarjana Universitas Diponegoro Semarang. 2009.

[42] Irfan, Ijaz and Farooq, 2012. Patient Satisfaction and Service Quality of Public Hospitals in Pakistan: An Empirical Assessment. Middle-East Journal of Scientific Research 12 (6): 870-877, 2012

[43] Jacobis, 2014. Faktor-faktor kualitas layanan pengaruhnya terhadap kepuasan pasien Rawat Inap peserta Jamkesmas di BLU RSUP Prof. DR. R.D Kandou Manado Jurnal Manajemen Pemasaran Petra Vol. 2, No. 1, (2014)

[44] Joreskog, Karl G., and Sorbom, Dag, 1996, LISREL 8 User's Reference Guide, 2nd Edition, Scientific Software International, Inc., Chicago.

[45] Kandampully, Jay and Suhartanto D, 2003. Consumer Loyality In The Hotel Industry: The Role of Customer Satisfaction and Image, International Journal of Contemporary Hospitality Management, Vol. 12, No. 6.

[46] Ken Sudarti dan Iva Atika, 2012. Menciptakan Kepuasan dan Loyalitas Pelanggan Melalui Citra dan Service Recovery (Studi pada Restoran Lombok Ijo Semarang), Jurnal Bisnis dan Ekonomi (JBE), Vol. 19, No. 1, Maret 2012 ISSN: 1412-3126

[47] Kotler, Philip & Kevin Lane Keller. 2012. Marketing Management, 14th Edition. New Jersey: Pearson Education, Inc (Publishing as Prentice Hall).

[48] Kotler, Philip, 2008. Manajemen Pemasaran: Analisis, Perencanaan, Implementasi, dan Kontrol, Surabaya: PerdanaPrintingArts

[49] Kotler, Philip dan Amstrong, 2012.Prinsip-Prinsip Pemasaran. Edisi kedelapan, Jakarta: Erlangga.

[50] Lubis, H., 2011. Analisis Pengaruh Kualitas Layanan terhadap Citra Merek pada poliklinik RS Haji Medan. Jurnal Ekonomi dan Manajemen, Vol. 2, No.2, Juni 2011, Hal. 172-189.

[51] Lovelock C., 2010.Pemasaran Jasa, Manusia, Teknologi, Strategi, Perspeksi Indonesia, Penerbit Erlangga, Jakarta

[52] Marty, 2007. Sukses Mengelola Marketing Mix, CRM, Customer Value, dan Customer Dependency. Kasus pada pemasaran Shopping Center. Penerbit Alfa Beta. Bandung.

[53] Marzaweny, Hadiwidjojo dan Chandra, 2004. Analisis Kepuasan Pasien sebagai mediasi pengaruh kualitas layanan kesehatan terhadap citra Rumah Sakit Umum Daerah (RSUD) Arifin Ahmad Pekan Baru. Jurnal Ekonomi Bisnis Tahun 11, Nomor 1, Maret 2004: 65-87.

[54] M. Gunawan Alif dan Yuliana Duti Harahap, 2013. Komunikasi Interpersonal Dan Fasilitas Kesehatan: Pengaruhnya Terhadap Kepercayaan, Loyalitas Dan WOM Rumah Sakit, Journal of Business and Entrepreneurship, Vol. 1, No. 3, Oktober 2013 ISSN: 2302-4119.

[55] Melysa Elisabeth Pongoh, 2013. Kualitas Pelayanan, Kualitas Produk Dan Harga Pengaruhnya Terhadap Loyalitas Pelanggan Kartu AS Telkomsel Di Kota Manado.Jurnal EMBA, Vol. 1, No. 4, Desember 2013.ISSN: 2303-1174

[56] Mirah Ayu Putri Trarintya, 2011.Pengaruh Kualitas Pelayanan Terhadap Kepuasan Dan Word Of Mouth Rawat Jalan Di Wing Amerta RSUP Sanglah Denpasar, Universitas Udayana, Denpasar, 2011.

[57] Mohammad Rizan, Basrah Saidani, Yusiyana Sari, 2012. Pengaruh Brand Image dan Brand Trust Terhadap Brand Loyalty Teh Botol Sosro (Survey Konsumen Teh Botol Sosro di Food Court ITC Cempaka Mas, Jakarta Timur), Jurnal Riset Manajemen Sains Indonesia (JRMSI), Volume 3, No. 1, 2012

[58] Muhammad Ehsan Malik, Prof. Dr., 2012.Impact of Service Quality on Brand Image: Empirical Evidence from Hotel Industry. Journal of Business and Entrepreneurship, Vol. 1, No. 1, Oktober 2011.

[59] Munandar Dadang, 2005. Pengaruh Customer Relationship Management terhadap Loyalitas Pelanggan bisnis PT Frisian Flag Indonesia Bandung. JurnalEkonomi & Bisnis, Vol 2. No4, 2005.

[60] Nadia K.W, I Wayan Jaman AP, Handri DW., 2012. Pengaruh Citra Merek Terhadap Kepercayaan. Jurnal Ekonomi Bisnis Tahun 17 , Nomor 1, Maret 2012 hlm 97-104.

[61] Nguyen, Nha and Guston Leblanc, 2000. Contact Personal, Physical Environment and The Perceived Corporate Image of Intangible Services by New Clients, International Journal of Services Management, Vol.13, No.3, MCB UP Limited.

[62] Ni Nyoman Suarniki, 2000. Analisis Kualitas Pelayanan dalam Mempengaruhi Kepuasan Konsumen Rumah Sakit Bersalin di Kotamadya Banjarmasin, Jurnal Ekonomi Bisnis Indonesia, 2000

[63] Nursalin Kezia Kurniawati, 2011. Pengaruh Customer Relationship Management terhadap Kepuasan dan loyalitas Pelanggan pada PT BCA Tbk. Forum Ekonomi Vol.10, no 3 183

[64] Octarina Dina Pertiwi, 2010. Analisis Pengaruh Kualitas Pelayanan Terhadap Kepuasan Konsumen Pasien Poli Spesialis Rumah Sakit ST. Elisabeth Semarang, Fakultas EkonomiUniversitas Diponegoro Semarang. 2010

[65] Okky Erviana, 2013. Pengaruh Kualitas Pelayanan Dan Kepercayaan Terhadap Kepuasan Pasien Rawat Inap di RSUD Dr. Soewondo Kendal. Jurnal Manajemen. Fakultas Ekonomi, Universitas Negeri Semarang

[66] O'Laughin, Christina dan Coenders, Germa, 2002. Application of The Europan Customer Satisfaction Index to Postal Services, Structural Equation Models Versus Partial Least Squares.Asean Marketing Journal, Vol. I, No. 1, 2002

[67] Pardede Ratlan dan Manurung Renhard. 2014. Analysis Jalur. Path Analysis. Teori dan Aplikasi Dalam Riset Bisnis. Rineka Cipta, Jakarta.

[68] Patawayati, Djumilah Zain, Margono Setiawan and Mintarti Rahayu, 2006.Patient Satisfaction, Trust and Commitment: Mediator of Service Quality and Its Impact on Loyalty (An Empirical Study in Southeast Sulawesi Public Hospitals). Universitas Brawijaya Malang.

[69] Prasetyo Widiyanto Bangun, 2010.Pengaruh Kualitas Pelayanan, Kepercayaan dan Kepuasan Terhadap Loyalitas Pelanggan (Studi pada Swalayan Luwes Purwodadi). Jurnal Tekbunga Vol. 2 No. 2 April 2010.

[70] Puti Ara Zena and Aswin Dewanto Hadisumarto, 2012.The Study Of Relationship Among Experiential Marketing, Service Quality, Customer Satisfaction, And Customer Loyalty Asean Marketing Journal, Vol. IV, No. 1, June 2012

[71] Pujiyono dan Andy Kridasusila, 2008.Analisis Pengaruh Kualitas Layanan Terhadap Minat Pembelian Ulang Dengan Kepuasan Pelanggan Sebagai Variabel Intervening (Studi Kasus Di Toko Alfamart Jatiwarna Semarang). Buletin Studi Ekonomi Vol 13 Nomor 3 tahun 2008.

[72] Rachmawati Rina, 2010. Pengaruh Kepuasan Terhadap Loyalitas Pelanggan (Sebuah Kajian Terhadap Bisnis Makanan). Jurnal Tekbunga Vol 2 No 2 April 2010.

[73] Randy Ramadhan, Dr. Fatchur Rohman, S.E., M.Si., 2012. Pengaruh Kualitas Pelayanan Jasa Terhadap Kepuasan Pasien Rawat Inap (Studi Pada Rumah Sakit Militer Di Kota Malang) Jurnal Ekonomi& Bisnis. Fakultas Ekonomi dan Bisnis Universitas Brawijaya Malang.

[74] Rangkuti F., 2010.Strategi Promosi Yang Kreatif dan Analisis Kasus Integrated Marketing Communication, PT Gramedia Pustaka Utama, Jakarta.

[75] Ratna Roostika, 2011. The Effect Service Quality and Trust on Loyalty Customer's Perspectives on Mobile internet Adoption International Journal of Innovation, Management and Technology, Vol. 2, No. 4, August 2011.

[76] Riana Gede, 2008. Pengaruh Trust in Brand Terhadap Brand Loyalty Pada Konsumen Air Minum Aqua di Kota Denpasar. Buletin Studi Ekonomi Vol 13 Nomor 3 tahun 2008.

[77] Riduwan, 2005, Skala Pengukuran Variabel-variabel Penelitian, Cetakan Ketiga, Bandung: CV. Alfabeta.

[78] Rina Rachmawati, 2010. Pengaruh Kepuasan Terhadap Loyalitas Pelanggan (Sebuah Kajian Terhadap Bisnis Makanan), Teknubuga, Volume 2 No. 2, April 2010

[79] Sangadji dan Sopiah, 2013.Perilaku Konsumen. Pendekatan Praktis Disertai Himpunan Jurnal Penelitian, CV Andi Offset, Yogyakarta.

[80] Schiffman & Kanuk, 2010. Perilaku Konsumen (edisi 7). Jakarta : Prentice Hall

[81] Setiawan S., 2010.Loyalitas Pelanggan Jasa, Studi kasus Bagaimana Rumah Sakit Mengelola Loyalitas Pelanggannya, PT Penerbit IPB Press, Bogor

[82] Sinambela, Lijan Poltak, 2006.Reformasi Pelayanan Publik, Teori, Kebijakan dan Implementasi, Jakarta: Bumi Aksara

[83] Singarimbun, Masri dan Effendi, 2006, Metode Penelitian Survai. LP3ES, Jakarta.

[84] Siswoyo dan Parwoto Wardoyo, 2012. Structural Equation Modelling. Untuk Penelitian Manajemen Menggunakan AMOS 18.00, Badan Penerbit PT Intermedia Personalia Utama. Jakarta

[85] Suaib, Indar, Jafar N., 2007.Pengaruh Kualitas Pelayanan Terhadap Kepuasan Pasien di Ruang Rawat Inap RSUD Syekh Yusuf Kabupaten Gowa.

[86] Suarniki, 2000.Analisis Kualitas Pelayanan dalam Mempengaruhi Kepuasan Konsumen dan Citra Rumah sakit Bersalin di Kotamadya Banjarmasin. Jurnal Manajemen Pemasaran , Vol 1 , No 1, April 2002.

[87] Subagio Hartono dan Saputra Robin, 2012.Pengaruh Perceived Service quality, Perceived Value, Satisfaction dan Image terhadap Customer Loyalty (Studi Kasus Garuda Indonesia).Jurnal Manajemen Pemasaran, Vol 7, No 1, April 2012.

[88] Sumarwan, Ujang dkk, 2013. Riset Pemasaran dan Konsumen, seri 3, PT Penerbit IPB Press, Bogor.

[89] Sumarwan, Ujang dkk, 2011.Perilaku Konsumen . Teori dan Penerapannya dalam Pemasaran. Edisi kedua, Ghalia Indonesia. Bogor.

[90] Supranto, J., 2011.Pengukuran Tingkat Kepuasan Pelanggan, Untuk Menaikkan Pangsa Pasar, Rineka Cipta, Jakarta

[91] Sutrisno, 2015. Pengaruh kualitas layanan, dan customer relationship management Terhadap Kepuasan dan Loyalitas Pasien. Jurnal Ilmu Ekonomi dan Manajemen. Vol. 02, No. 02. Sept 2015;pp. 27-41.

[92] Sutisna, 2012. Perilaku Konsumen dan Komunikasi Pemasaran. Edisi Pertama. PT. Remaja Rosda Karya, Bandung.

[93] Swastha, Basu dan Irawan, 2013. Manajemen Pemasaran Modern. Yogyakarta: Liberty.

[94] Tjahyadi Rully Arlan, 2006.Brand Trust Dalam Konteks Loyalitas Merek: Peran Karakteristik Merek, Karakteristik Perusahaan, dan Karakteristik Hubungan Pelanggan-Merek. Jurnal Manajermen, Vol 6, No 1, Nov 2006

[95] Tjiptono, Fandy, 2007. Pemasaran Jasa. Malang : Bayumedia Publishing.
[96] Tjiptono, Fandy, 2014. Service Management: mewujudkan pelayanan prima. Yogyakarta : Penerbit ANDI.
[97] Tri Susilowati, Agus Suryana, 2012. Analisis Penerapan Customer Relationship Management (CRM) Pada Perpustakaan STMIK Pringsewu Dalam Upaya Meningkatkan Kepuasan MahasiswaSeminar Nasional Aplikasi Teknologi Informasi 2012ISSN: 1907-5022
[98] Woro Utari, 2004. Pengaruh kualitas layanan, perbaikan layanan, harga, danimage perusahaanterhadap kepuasan pelanggandan loyalitas pelanggan
[99] Yulisa Gardenia, 2009. Pengaruh Kepuasan Terhadap Loyalitas Nasabah Bank http://www.gunadarma.ac.id/library/articles//economy/2009/Artikel_11205365.pdf
[100] Zeithaml Valerie A. et al, 1990.Delivering Quality Service, Balancing Customer Perceptions and Expectation, The Free Press, A Division of Macmillan, Inc, New York.